Ordnance Survey Ireland Licence No. EN 0006025 © Ordnance Survey Ireland/Government of Ireland.

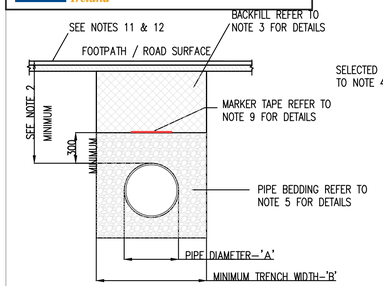

CROSS SECTION IN ROADWAY

NOTE:
ALL ROAD JOINTS TO BE SAW CUT AND SEALED WITH BITUMEN

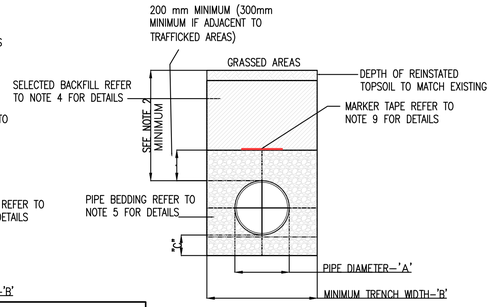

CROSS SECTION IN GRASS AREA

TRENCH BACKFILL AND BEDDING STD–W–13

PIPE DIAMETER 'A' (mm)	TRENCH WIDTH 'B' (mm)
≤ 80	SEE NOTE 10
100	500
150	600
200	600
250	750
300	750
350	750
400	900
450	900

PIPE DIAMETER 'A' (mm)	DEPTH OF BEDDING 'C' (mm)
≤ 200	150
≥ 250	200

PIPE BEDDING NOTES:

1. ALL DIMENSIONS ARE IN MILLIMETRES (mm) UNLESS NOTED OTHERWISE.
2. THE MINIMUM DEPTH OF COVER FROM THE FINISHED GROUND LEVEL TO THE EXTERNAL CROWN OF THE PIPE SHALL BE 900mm WHERE THE PIPE IS TO BE LOCATED IN HOUSING ESTATE ROADS. GREATER DEPTHS OF COVER AND/OR PIPE STRENGTH AND/OR A HIGHER CLASS OF BEDDING MATERIAL MAY BE REQUIRED WHERE HIGH TRAFFIC LOADING IS ANTICIPATED. THE DESIRABLE COVER FOR A WATERMAIN SHOULD BE 1200mm, WHERE PRACTICABLE & SHOULD NOT EXCEED 3.0m.
3. CLAUSE 804 / 808 MATERIAL IN ACCORDANCE WITH THE NATIONAL ROADS AUTHORITY SPECIFICATION FOR ROAD WORKS IS TO BE USED AS BACKFILL MATERIAL WHERE THE WATER MAIN IS LOCATED IN ROADS, FOOTPATHS OR WHEN THE NEAREST PART OF THE TRENCH IS WITHIN 1m OF THE PAVED EDGE OF THE ROADWAY. CLAUSE 804 / 808 IS TO BE COMPACTED AS PER CLAUSE 802 OF THE NATIONAL ROADS AUTHORITY SPECIFICATION FOR ROAD WORKS. CLAUSE 808 IS TO BE USED WITHIN 500mm OF CEMENT BOUND MATERIALS, CONCRETE PAVEMENTS, CONCRETE STRUCTURES OR CONCRETE PRODUCTS. OTHERWISE CLAUSE 804 MAY BE USED. ALTERNATIVE BACKFILL MATERIAL TO THAT DESCRIBED ABOVE (CLAUSE 804 OR CLAUSE 808) OF THE PIPE TRENCH WILL ONLY BE ALLOWED BY IRISH WATER WHERE THE ROADS AUTHORITY IN WHOSE FUNCTIONAL AREA THE DEVELOPMENT IS LOCATED, PROVIDES WRITTEN APPROVAL TO THE DEVELOPER TO THE USE SUCH ALTERNATIVE MATERIAL.
4. SELECTED EXCAVATED MATERIAL MAY BE USED IN GREEN–FIELD AREAS ABOVE GRANULAR PIPE SURROUND MATERIAL SUBJECT TO REVIEW BY IRISH WATER.
5. PIPE BEDDING SHALL COMPLY WITH WIS 4–08–02 AND IGN 4–08–01 GRANULAR MATERIAL SHALL BE 14mm TO 5mm GRADED AGGREGATE OR 10mm SINGLE SIZED AGGREGATE TO IS EN 13242.
6. IN SOFT GROUND CONDITIONS (CBR < 5) THE MATERIAL SHOULD BE EXCAVATED OUT AND DISPOSED OF IN ACCORDANCE WITH THE WASTE MANAGEMENT ACT AND CLAUSE 804 / 808 MATERIAL IN ACCORDANCE WITH THE NATIONAL ROADS AUTHORITY SPECIFICATION FOR ROAD WORKS SHALL REPLACE THE EXCAVATED MATERIAL, WRAPPED IN GEO–TEXTILE WRAPPING. ALTERNATIVELY, SPECIAL PIPE SUPPORT ARRANGEMENTS, INCLUDING PILING ETC. MAY BE REQUIRED WHERE THE DEPTH OF SOFT MATERIAL IS EXCESSIVE. SUCH ARRANGEMENTS SHALL BE SUBJECT TO ASSESSMENT BY IRISH WATER BEFORE ADVANCING WITH THE WORK.
7. PIPES SHALL NOT BE SUPPORTED ON STONES OR ROCKS, OR ANY HARD OBJECT AT ANY POINT ALONG THE TRENCH. ROCK SHALL BE EXCAVATED TO A DEPTH OF 150mm BELOW THE ACTUAL DEPTH OF THE TRENCH WITH THE VOID FILLED WITH CLAUSE 804 / 808 MATERIAL IN ACCORDANCE WITH THE NATIONAL ROADS AUTHORITY SPECIFICATION FOR ROAD WORKS. THE GRANULAR MATERIAL SHALL BE LAID ABOVE THIS VOID BACKFILL MATERIAL.
8. SHOULD MINIMUM COVER NOT BE ACHIEVABLE, CONCRETE GRADE C8/10 SHALL BE USED AS BACKFILL MATERIAL.
9. MARKER TAPE TO BE 400mm WIDE BLUE POLYETHYLENE MATERIAL IN ACCORDANCE WITH EN 12163, PLASTIC PIPES SHALL HAVE WARNING TAPE INCORPORATED A REINFORCED BAND BRACING WIRE. SERVICE PIPES SHALL HAVE 200mm WIDE MESH TAPE. MARKER TAPE TO BE LAID AT TOP OF PIPE BEDDING LAYER.
10. TRENCH WIDTHS FOR PIPE SIZES ≤80mm MAY BE <500mm, SUBJECT TO CONSIDERATION BEING GIVEN TO THE TRENCH DEPTH, HEALTH & SAFETY & CONSTRUCTION ACCESS REQUIREMENTS.
11. NEW ROAD CONSTRUCTION & SURFACE FINISH TO BE TO ROAD AUTHORITY REQUIREMENTS.
12. EXISTING ROAD REINSTATEMENT TO COMPLY WITH CURRENT VERSION OF "GUIDELINES FOR MANAGING OPENINGS IN PUBLIC ROADS" BY THE DEPT. OF TRANSPORT, TOURISM & SPORT, OR TRANSPORT INFRASTRUCTURE IRELAND REQUIREMENTS.

NOTES:

1. DO NOT SCALE. USE FIGURED DIMENSIONS ONLY.
2. THIS DRAWING IS TO BE READ IN CONJUNCTION WITH ALL OTHER RELEVANT ARCHITECTURAL AND ENGINEERING DRAWINGS.

This drawing should not be scaled. Dimensions to be verified on site.
Any discrepancies should be referred to the Engineer prior to work being put in hand.
This drawing is the property of Waterman Moylan Consulting Engineers Limited and is issued on the condition that it is not copied, reproduced, retained or disclosed to any unauthorized person, either wholly or in part without the consent in writing of Waterman Moylan Consulting Engineers Limited
Block S East Point Business Park Dublin D03 H3F4 Ireland t +353 1 664 8900

MARKER PLATES NOTES

1. WHERE PRACTICAL MARKER PLATES SHALL BE FIXED TO ADJACENT WALLS OR ALTERNATIVELY ATTACHED TO MARKER POSTS.
2. PLATES TO BE FIXED IN POSITION USING WALL PLUGS AND STAINLESS STEEL SCREWS.
3. MARKER PLATES TO BE MANUFACTURED IN ACCORDANCE WITH BS 3251.
4. FOR HYDRANT PLATE ALL CHARACTERS SHOULD BE BLACK AND THE REMAINDER OF THE FRONT FACE SHOULD CONFORM TO COLOUR REFERENCE No. 309 (CANARY YELLOW) OF BS 381C.
5. PIPE DIAMETER ON HYDRANT PLATE TO REFER TO WATERMAIN NOT BRANCH.
6. SLUICE VALVE, AIR VALVE, SCOUR VALVE, WASHOUT HYDRANT AND METER PLATES SHOULD BE CAST IRON. ALL CHARACTERS SHOULD BE BLACK ON WHITE PAINT BACKGROUND. ALTERNATIVE MATERIAL MAY BE USED SUBJECT TO ACCEPTANCE BY IRISH WATER.
7. CONCRETE SURROUND TO MARKER POST TO BE GRADE C25 / 30 AND IN ACCORDANCE WITH IS EN 206/2013.
8. PLASTIC MARKER POSTS ARE NOT ACCEPTABLE.
9. ALL CONCRETE TO BE IN ACCORDANCE WITH IS EN 206.

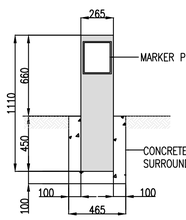

ELEVATION
(SCALE 1:25)

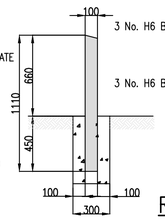

SECTION
(SCALE 1:25)

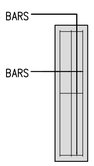

REINFORCEMENT DETAILS
(SCALE 1:25)

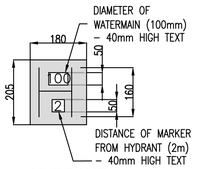

HYDRANT
(N.T.S)

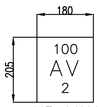

AIR VALVE
(N.T.S)

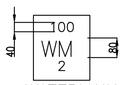

WATERMAIN
(N.T.S)

SLUICE VALVE
(N.T.S)

BULK METER
(N.T.S)

SCOUR VALVE
(N.T.S)

PRESSURE REDUCING / SUSTAINING VALVE
(N.T.S)

METER
(N.T.S)

WASHOUT HYDRANT
(N.T.S)

MARKER POST/PLATE DETAILS
STD–W–27

METER DIAMETER 'A' (mm)	INTERNAL CHAMBER DIMENSIONS	COVER DIMENSIONS
50–100	1200 x 1200	750 x 750
101–250	1500 x 1500	900 x 900

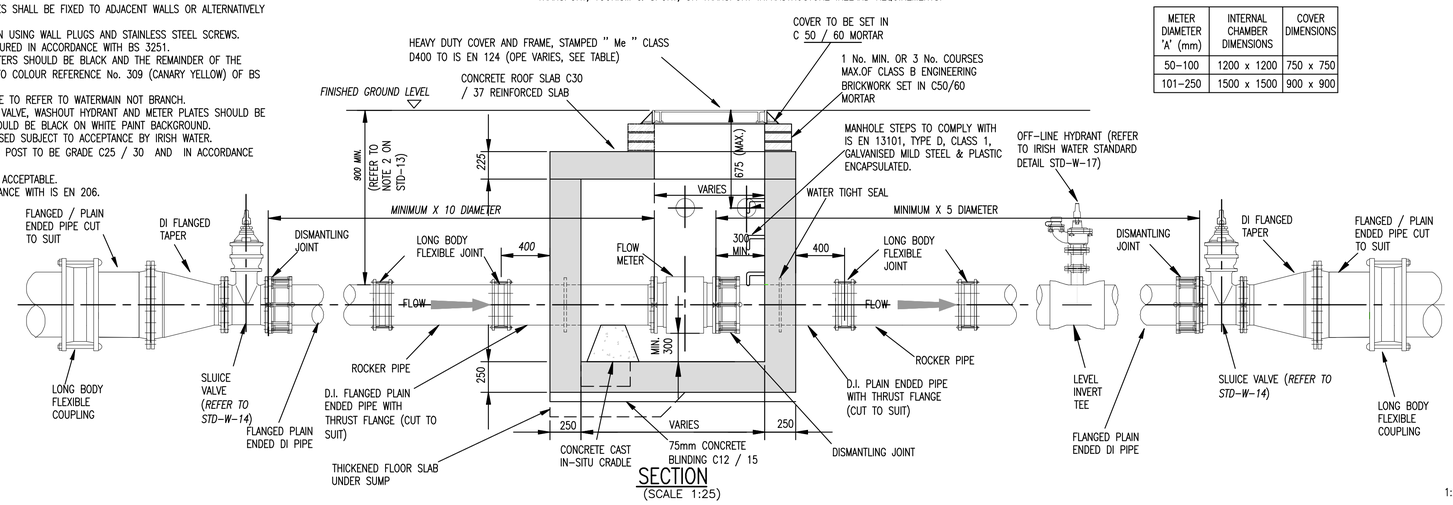

SECTION
(SCALE 1:25)

1:25 0 0.5 1.0 1.5 2.0 2.5m
1:1 0 10 20 30 40 50 60 70 80 90 100

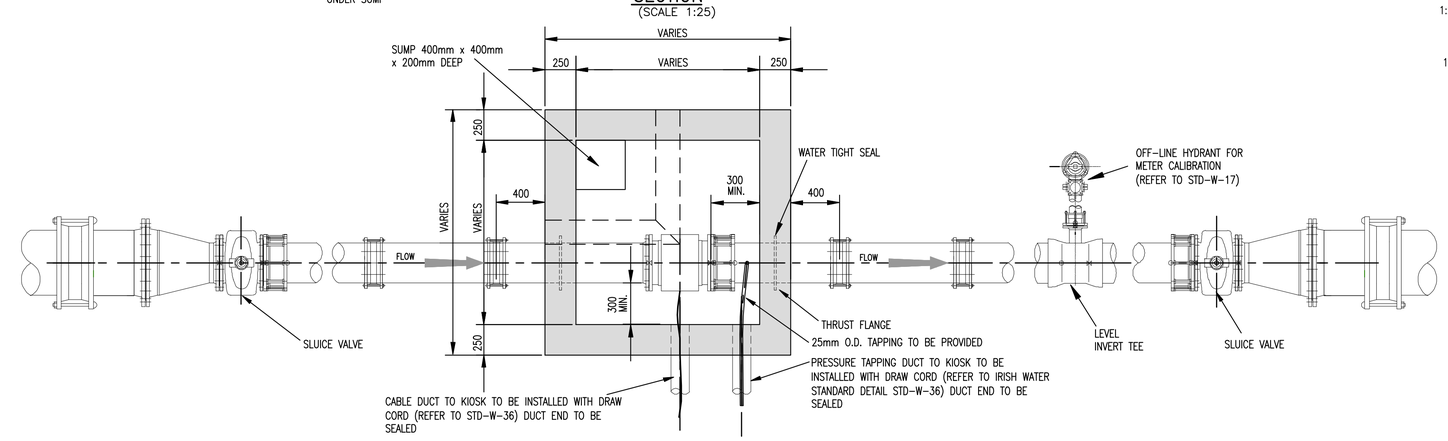

PROPOSED BULK WATER METER PLAN VIEW
STD–W–26
(SCALE 1:25)

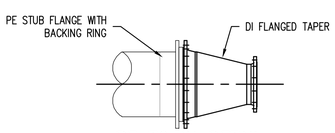

PE TO DI DETAIL

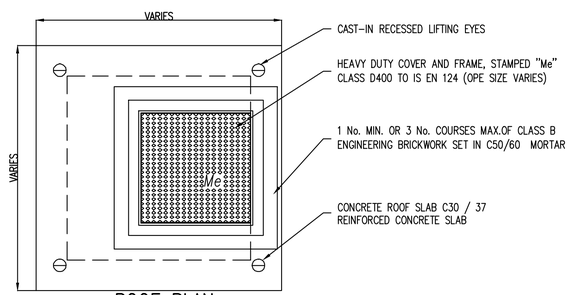

ROOF PLAN

PROPOSED WATER SUPPLY DETAILS
SHEET 1 OF 3
SCALE 1:25

1. ALL DIMENSIONS ARE IN MILLIMETRES (mm) UNLESS NOTED OTHERWISE.
2. STRUCTURAL DESIGN AND REINFORCEMENT DETAIL TO BE PROVIDED BY THE DEVELOPER AND SUBMITTED TO IRISH WATER FOR REVIEW. ROOF SLABS SHALL BE DESIGNED TO CARRY ALL LIVE LOADS & DEAD LOADS, & CONSIST OF A REINFORCED CONCRETE SLAB OF IN–SITU CONCRETE, GRADE C30/37, WITH A MINIMUM THICKNESS OF 225mm. ALTERNATIVELY, PRE–CAST CONCRETE ROOFS MAY BE USED, SUBJECT TO IRISH WATER REVIEW, & COMPLIANCE WITH BS 5911, Part 4.
3. CONCRETE FOR FLOW METER CHAMBER TO BE C30/37.
4. PRECAST UNITS COMPLETED WITH RUBBER SEALING GASKET BETWEEN UNITS, COMPLYING WITH THE REQUIREMENTS OF IS EN 1917 AND BS 5911–PART 3, COMPLETE WITH 150mm CONCRETE SURROUND MAY BE USED AS AN ACCEPTABLE ALTERNATIVE. CONCRETE SURROUND TO BE GRADE C16/20 IN ACCORDANCE WITH IS EN 206.
5. METER CHAMBER SHALL BE COVERED WITH APPROVED HEAVY DUTY METAL COVERS TO IS EN 124: 1994 RATING D400. COVER AND FRAME SHALL BE SUITABLE FOR ROAD AND TRAFFIC CONDITIONS AND IS SUBJECT TO REVIEW BY IRISH WATER.
6. 200mm ALL ROUND, 100mm DEEP CONCRETE PLINTH AROUND COVER IN GRASS AREAS.
7. ANTI CORROSION TAPE TO BE PROVIDED AROUND BURIED FLANGES.
8. DUCTILE IRON PIPES AND FITTINGS TO BE IN ACCORDANCE WITH IS EN 545. PE PIPES AND FITTINGS TO BE IN ACCORDANCE WITH IS EN 12201:2011.
9. ALL CHAMBERS TO BE CHECKED FOR UPLIFT BY THE DEVELOPER BASED ON GROUND CONDITIONS WITHIN THE SITE. SHOULD ANTI FLOATATION MEASURES BE REQUIRED THEY SHALL BE SUBJECT TO REVIEW BY IRISH WATER.
10. PIPEWORK TO BE DOWNSIZED TO ACCOMMODATE THE REQUIRED RANGE OF THE FLOW METER. STRAIGHT PIPE LENGTHS UPSTREAM AND DOWNSTREAM OF THE METER TO BE PROVIDED. THE METER SHALL BE CAPABLE OF ACCURATE NIGHT FLOW MEASUREMENTS.
11. ALL CONCRETE TO BE IN ACCORDANCE WITH IS EN 206.
12. ANY SPECIAL ROAD REINSTATEMENT AROUND COVER & FRAME SHALL BE TO ROAD AUTHORITY'S REQUIREMENTS.
13. NEW ROAD CONSTRUCTION & SURFACE FINISH TO BE TO ROAD AUTHORITY REQUIREMENTS.
14. EXISTING ROAD REINSTATEMENT TO COMPLY WITH CURRENT VERSION OF "GUIDELINES FOR MANAGING OPENING IN PUBLIC ROADS" BY THE DEPT. OF TRANSPORT, TOURISM & SPORT, OR TRANSPORT INFRASTRUCTURE IRELAND REQUIREMENTS.

Rev	Date	Description	By	Chk
P02	28/08/26	ISSUED FOR PLANNING APPLICATION	IG	IW
P01	07/05/26	ISSUED FOR STAGE 2 APPLICATION	IG	IW

Amendments

Project
PROPOSED LRD PLANNING APPLICATION 1, BALBRIGGAN, CO. DUBLIN

Title
WATER SUPPLY DETAIL
SHEET 1 OF 3

Client
LAGAN HOMES LTD.

waterman moylan

BLOCK S, EASTPOINT BUSINESS PARK, ALFIE BYRNE ROAD, DUBLIN D03 H3F4 IRELAND. Tel: (01) 664 8900
Email: info@waterman-moylan.ie www.waterman-moylan.ie

Status: PLANNING

Designed By	Approved	Waterman Ref
PI	IW	25-107
Drawn By	Date	Scales @ A1
IG	MAY. 2026	AS SHOWN

Project - Originator - Volume - Level - Type - Role - Number: FLE - WMC - CA4- XX - DR - C - P0310
Revision: P02

Drawing Location: N:\Projects\25\25-107 Flemington Balbriggan\Drawings\Waterman Moylan\Civil\Planning\Autocad Drawings\FLE-WMC-CA4-ZZ-DR-C-P0310 Water Supply Details - Sheet 1 of 3.dwg
Date: Aug 27, 2026 - 3:32pm